MLG35PD

MAYTAG® COMMERCIAL ENERGY ADVANTAGE™ MULTI-LOAD STACK DRYER

Shown in Stainless Steel.

LEGENDARY MAYTAG DEPENDABILITY

Maximizing your equipment investment for over a half century.

ENERGY-SAVING SOLUTIONS

Maytag built the first appliance ever to receive the ENERGY STAR® label. Today we offer energy-saving laundry solutions for all commercial laundry needs—from energy-efficient dryers to highly efficient ENERGY STAR®-qualified washers—to help you save money and build profits.

UPDATED CONTROLS

New soft-touch keypad for ease-of-use and durability. Includes Maytag® Accu Trac® audit system that uses a PDA to communicate with the microprocessor controls—so you can set up, monitor and audit your equipment in seconds.

CAPACITY:

- 35 lb. Capacity
- 17% Greater Capacity Than a Maytag® 30-lb. Stack Dryer

FOR YOUR CUSTOMERS:

- Fast-Drying Axial 100% Airflow System Enhances Airflow
- ThermoGuard™ System Helps Prevent Laundry Overheating
- Owner-Programmable Single-Phase Reversing
- Extra-Large Door Openings With Dual Pane Glass Door
- Time Remaining Digital Display
- Self-Diagnostic Microprocessor Controls

FOR YOUR OPERATION:

- Low BTUs and Fast Dry
- Enhanced Insulation For Greater Efficiency
- Front Serviceable
- Accu Trac® Audit System With Two-Way Data Communication
- Single Payment System
- 2 Large-Capacity Lint Drawers

BUILT-TO-LAST™ FEATURES:

- Heavy-Duty Enclosed Motors
- Fire Suppression System
- Four-Point Roller Support System
- 5 Year Limited Warranty—All Parts Covered

LAUNDRY SOLUTIONS YOU CAN DEPEND ON.

visit maytagcommerciallaundry.com
or call 800-662-3587

MY120135

OUR COMMITMENT TO DEPENDABLE QUALITY

At Maytag, we believe durable goods should remain just that. That's why every Maytag® product is constructed of the highest-quality materials and with the utmost in precision craftsmanship. It's also why we stand behind our equipment with solid service and support from our professional Maytag laundry suppliers. Simply put, when you choose Maytag® products, you ensure your peace of mind.

MLG35PD

MAYTAG® COMMERCIAL ENERGY ADVANTAGE™ MULTI-LOAD STACK DRYER

Maytag® Commercial Energy Advantage™ Multi-Load Stack Dryer

MICROPROCESSOR COIN-DROP

DRYER SPECIFICATIONS	
MODEL	**MLG35PD**
MOTOR	
Single-phase, thermoprotected against overload, auto-reset	•
Drive Motor — HP (kw)	.25 (.19)
Blower Motor — HP (kw)	.50 (.37)
CAPACITY	
Lbs. (kg) per drying chamber	2 x 35 (2 x 15.8)
Cu. ft. (cu. m) per drying chamber	2 x 12.27 (2 x .347)
AIRFLOW	
Cfm (cmm) per drying chamber	380 (10.76)
TUMBLERS	
Diameter — in. (mm)	2 x 30 (2 x 762)
Depth — in. (mm)	2 x 30 (2 x 762)
ELECTRICAL REQUIREMENTS	120V, 60 Hz
Export Models — options available	220-380V/1PH or 3 PH
BREAKER/FUSE REQUIREMENTS	
Amps per drying chamber	15
EXHAUST DUCT DIAMETER	
In. (mm)	2 x 6 (152)
GAS RATING	
BTU/hr. (kcal/hr.) per drying chamber	64,000 (16,138)
GAS INLET	
M.N.P.T. in. (mm)	2 inlets, ½ (12.7)
COLORS	
White	•
Stainless Steel	•
APPROXIMATE WEIGHT	
Crated — lbs. (kg)	630 (286)
Uncrated — lbs. (kg)	600 (272)
DIMENSIONS	
Height — in. (mm)	80 3/8 (2,042)
Width — in. (mm)	31 1/8 (791)
Depth — in. (mm)	39 5/8 (1,006)
Door opening diameter — in. (mm)	19 3/8 (492)

See specific instructions for proper installation.
Because of continuous product improvement, Maytag reserves the right to change specifications without notice.

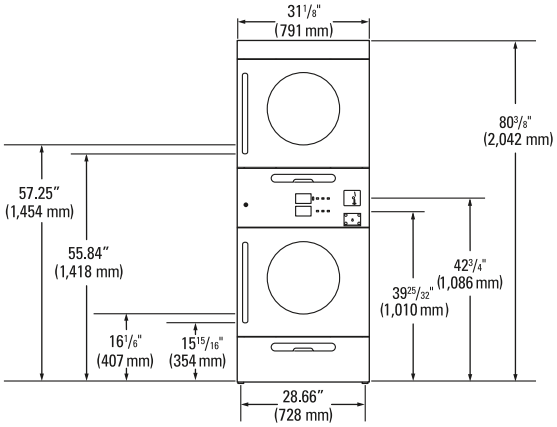

FRONT VIEW

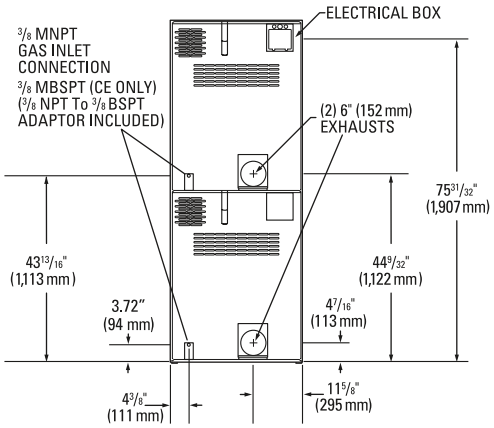

BACK VIEW

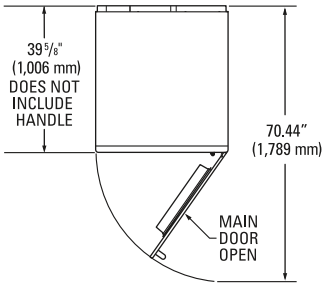

TOP VIEW

5 YEAR LIMITED WARRANTY
ALL PARTS COVERED

For a period from the date of original purchase through the time listed above, the designated parts that fail in normal commercial use will be repaired or replaced free of charge for the part itself, with the owner paying all other costs, including labor, transportation and customs duty. Chemical damage is excluded from all warranty coverage. See complete warranty for details.